HEXAGON
MANUFACTURING INTELLIGENCE

TESA
TECHNOLOGY

TESA ESSENTIAL DEALS

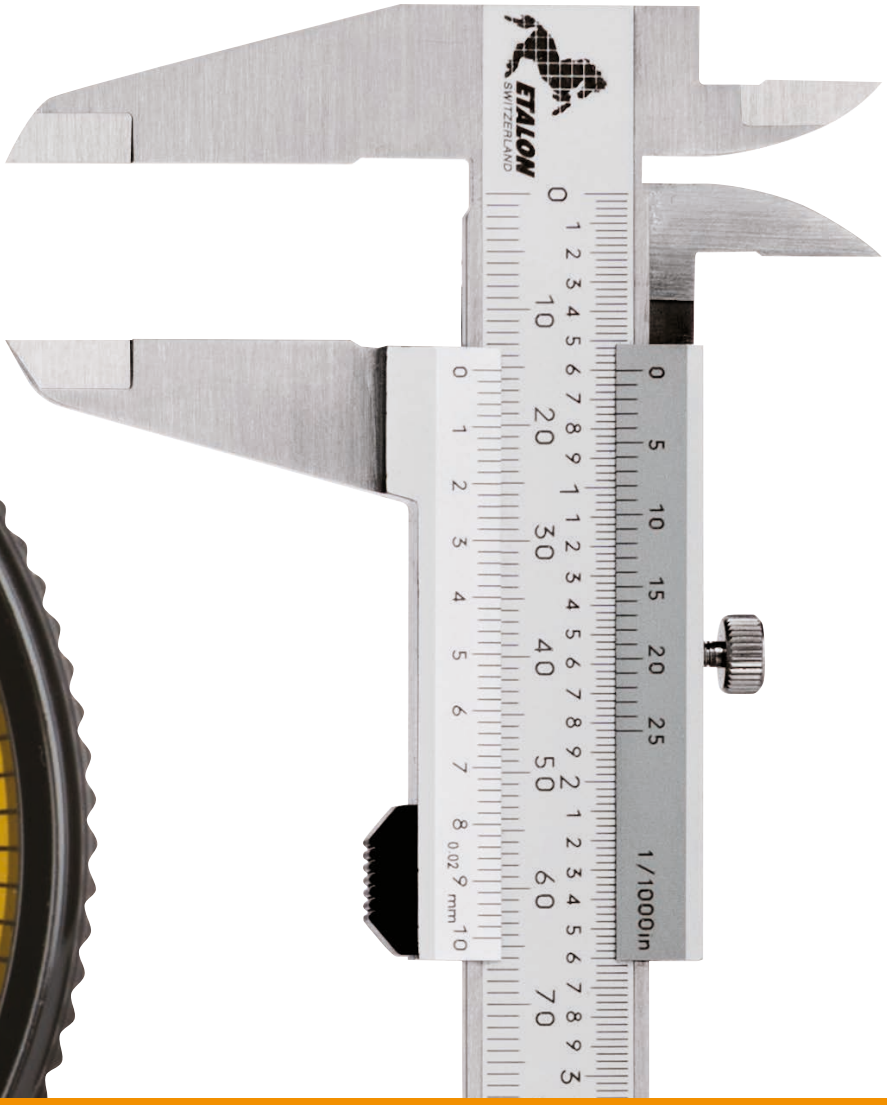

Special promotions up to 82% off the list price
Limited quantities

Prices valid until: 30.09.2017
AVAILABLE IMMEDIATELY
WHILE STOCKS LAST
Prices exclude VAT
Version EN – EUR

ETALON BASIC WITH 7 PAIRS OF EXCHANGEABLE INSERTS

- Non-rotating spindle 8mm
- Maximum permissible errors of the micrometer 4µm
- Each set incl. 7 pairs of measuring inserts

Up to
-58%

Available immediately – while stocks last

Order number	Measuring range (mm)	Resolution (mm)	List price (€)	Rebate	Promo price (€)
00219056	0 ÷ 25	0,01	527	-57%	**229**
00219058	25 ÷ 50	0,01	543	-56%	**239**
00219060	50 ÷ 75	0,01	614	-58%	**259**
00219062	75 ÷ 100	0,01	629	-57%	**269**

Order number	Measuring face or faces	Dimensions (mm)
00269020	flat	ø 6,5
00269021	small, flat	ø 2
00269022	spherical	R = 5
00269023	large, flat	ø 12
00269024	narrow, flat	0,7
00269025	cone-shaped	ø 0,3/60°
00269026	knife-edged	0,3/60°

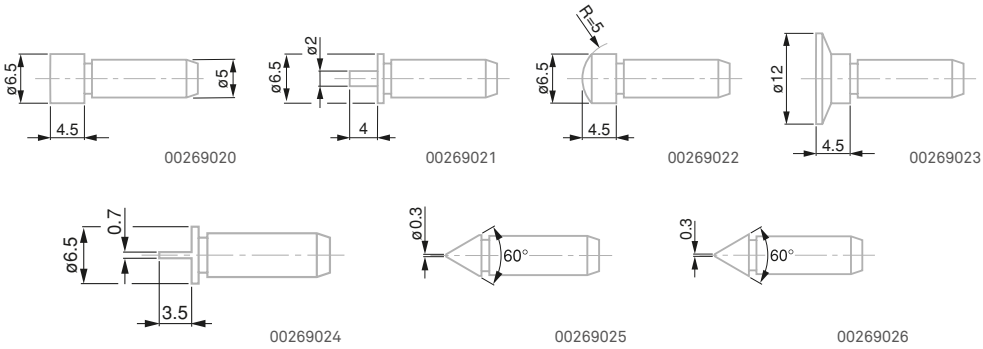

HEXAGON
MANUFACTURING INTELLIGENCE

TESA
TECHNOLOGY

TESA EXTERNAL MICROMETER CLASSIC MASTER

- Suitable for every workshop
- DIN 863-1
- Robust version

-82%

Available immediately – while stocks last

Order number	Measuring range (mm)	Resolution (mm)	List price (€)	Rebate	Promo price (€)
00113109	25 ÷ 50	0,01	187	-82%	33

ETALON LEVER TEST INDICATOR

- Stable and easy to read
- DIN 2270
- Dial D=38mm
- Shockproof version
- Measuring insert with hard metal ball tip
- Delivered with 2 mounting rods (8h6 & 6h6)

-50%

Available immediately – while stocks last

Order number	Measuring range (mm)	Scale division/ diameter (mm)	List price (€)	Rebate	Promo price (€)
01819006	0,8	0,01 / 38	94	-50%	47

HEXAGON
MANUFACTURING INTELLIGENCE

TESA
TECHNOLOGY

ETALON DIAL CALIPER

– Stainless steel, hardened measuring faces
– According to DIN 862
– Incl. shockproof system

-50%

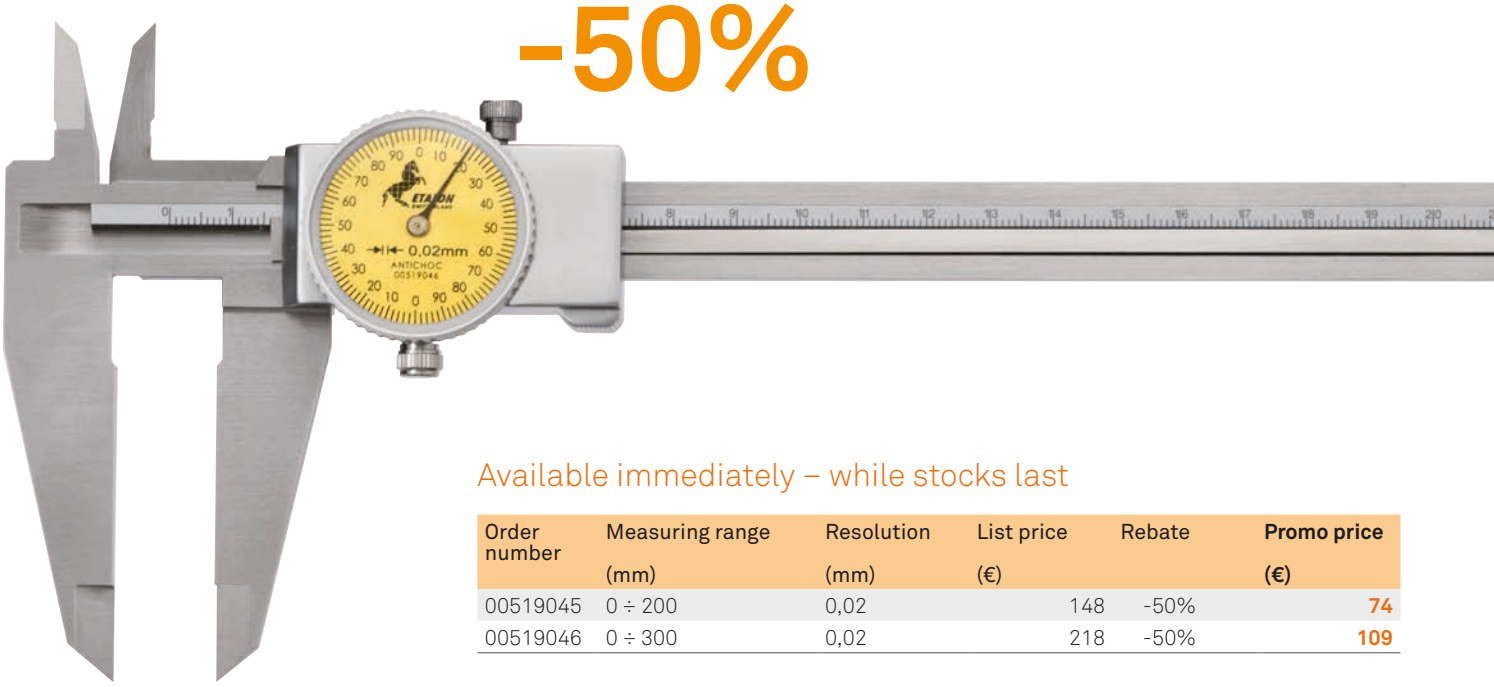

Available immediately – while stocks last

Order number	Measuring range (mm)	Resolution (mm)	List price (€)	Rebate	Promo price (€)
00519045	0 ÷ 200	0,02	148	-50%	**74**
00519046	0 ÷ 300	0,02	218	-50%	**109**

ETALON UNIVERSAL VERNIER CALIPERS

– Stainless steel, hardened measuring faces
– According to DIN 862

Up to
-50%

Available immediately – while stocks last

Order number	Measuring range (mm / in)	Resolution (mm / in)	List price (€)	Rebate	Promo price (€)
00539103	0 ÷ 150 / 0 ÷ 6	0,05 / 1/128	40	-45%	**22**
00539110	0 ÷ 150 / 0 ÷ 6	0,02 / .001	40	-45%	**22**
00539104	0 ÷ 200 / 0 ÷ 8	0,05 / 1/128	78	-50%	**39**
00539111	0 ÷ 200 / 0 ÷ 8	0,02/ .001	78	-50%	**39**
00539105	0 ÷ 300 / 0 ÷ 10	0,05 / 1/128	184	-50%	**92**

HEXAGON
MANUFACTURING INTELLIGENCE

TESA
TECHNOLOGY

MECHANICAL ETALON DIAL GAUGES

– Adjustable tolerance markers
– Measuring insert with steel ball tip
– According to EN ISO 463

Up to
-50%

Available immediately – while stocks last

Order number	Measuring range (mm)	Scale division/ diameter (mm)	List price (€)	Rebate	Promo price (€)
01419044	1	0,001 / 58	190	-50%	**95**
01419148	10	0,01 / 58	54	-41%	**32**
01419151	1	0,001 / 58	114	-50%	**57**

HEXAGON
MANUFACTURING INTELLIGENCE

TESA
TECHNOLOGY

MECHANICAL ROCH DIAL GAUGE

- Special edition with mounted central lug back
- Adjustable tolerance markers
- Measuring insert with steel ball tip D=3mm
- According to EN ISO 463

-55%

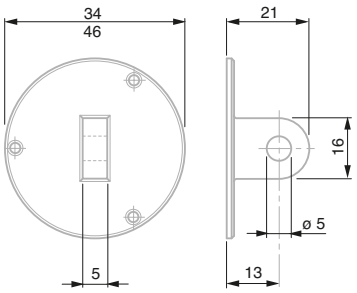

Available immediately – while stocks last

Order number	Measuring range (mm)	Scale division/ diameter (mm)	List price (€)	Rebate	Promo price (€)
0141760636	10	0,01 / 58	65	-55%	29

ETALON MAGNETIC SUPPORT

- Flexible adjustment with high holding force
- Quick and safe fixing

-51%

Available immediately – while stocks last

Order number	Description	List price (€)	Rebate	Promo price (€)
01639123	Articulated magnetic stand for lever test indicator or dial gauge	59	-51%	29

TESA SA – Renens – Switzerland – www.tesatechnology.com – tesa-info@hexagon.com

©2017Hexagon AB and/or its subsidiaries and affiliates. All rights reserved.